Technical Product Sheet

BV39-6666M-PN10/PN16

Wafer type swing check valve with spring, mounting beween flanges PN10/16
Face to Face Standard: Factory standard

Item Number	Belven Ref.
39307700032	BV39-6666M-PN16-DN032
39307700040	BV39-6666M-PN16-DN040
39307700050	BV39-6666M-PN16-DN050
39307700065	BV39-6666M-PN16-DN065
39307700080	BV39-6666M-PN16-DN080
39307700100	BV39-6666M-PN16-DN100
39307700125	BV39-6666M-PN16-DN125
39307700150	BV39-6666M-PN16-DN150
39307700200	BV39-6666M-PN16-DN200

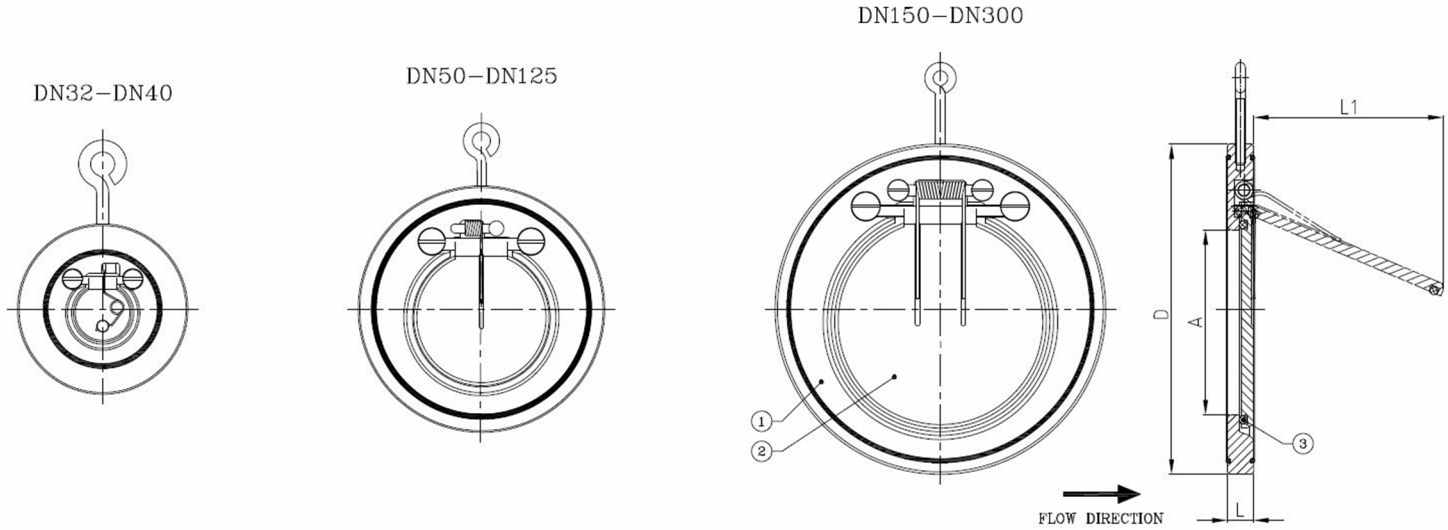

DN/Size	L	D	A	L1	Press.Cl.	Weight(kg)
DN32 (1 1/4")	15	85	18	22	PN16	0.60
DN40 (1 1/2")	16	95	22	25	PN16	0.80
DN50 (2")	14	109	32	37	PN16	0.90
DN65 (2 1/2")	14	129	40	50	PN16	1.20
DN80 (3")	14	144	54	61	PN16	1.50
DN100 (4")	18	164	70	77	PN16	2.40
DN125 (5")	18	195	92	98	PN16	3.30
DN150 (6")	20	220	112	120	PN16	4.60
DN200 (8")	22	275	154	160	PN16	7.70

Item 1	Item 2	Item 3
Body Material	Disc Material	Seat Material
Stainless steel : 1.4408 (CF8M)	Stainless steel : 1.4408/1.4581 (CF8M/AISI 316Nb)	METAL

Belven N.V.
Blokhuisstraat 24 | 2800 Mechelen | Belgium
Tel. 015 29 40 70 | Fax. 015 20 14 13 | info@belven.com | www.belven.com

We keep the right to change the mentioned dimensions, weights, values and materials at any time without prior or direct notice.