Technical Product Sheet

BV50A-2363E-PN10 - Handwheel

Knife gate valve, uni-directional, to be mounted between flanges PN10, with rising stem and non-rising handwheel

Face to Face Standard: Factory standard

Item Number	Belven Ref.
50A2036E20050	BV50-2363E-PN10 DN050 - HANDWHEEL
50A2036E20065	BV50-2363E-PN10 DN065 - HANDWHEEL
50A2036E20080	BV50-2363E-PN10 DN080 - HANDWHEEL
50A2036E20100	BV50-2363E-PN10 DN100 - HANDWHEEL
50A2036E20125	BV50-2363E-PN10 DN125 - HANDWHEEL
50A2036E20150	BV50-2363E-PN10 DN150 - HANDWHEEL
50A2036E20200	BV50-2363E-PN10 DN200 - HANDWHEEL
50A2036E20250	BV50-2363E-PN10 DN250 - HANDWHEEL
50A2036E20300	BV50-2363E-PN10 DN300 - HANDWHEEL

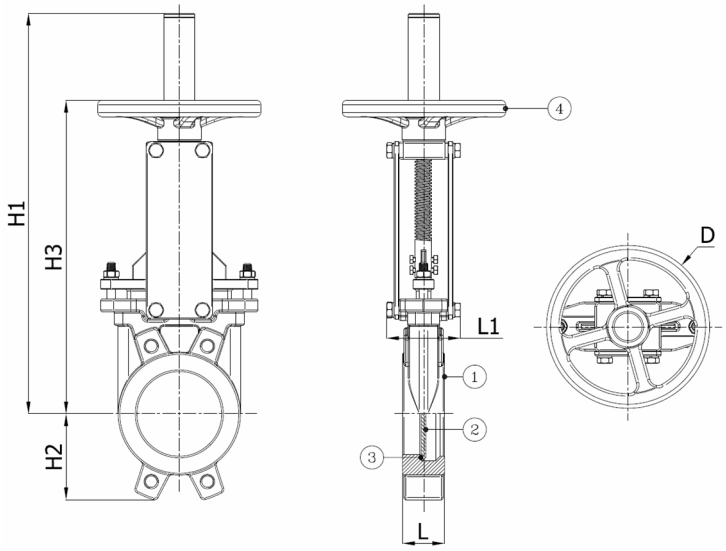

DN/Size	L	H1	H2	H3	D	L1	Press.Cl.	Weight(kg)
DN50 (2")	40	425	68	284	200	90	PN10	8.00
DN65 (2 1/2")	40	450	68	308	200	90	PN10	9.00
DN80 (3")	50	480	90	334	200	90	PN10	10.00
DN100 (4")	50	520	105	374	200	90	PN10	11.50
DN125 (5")	50	600	118	413	250	100	PN10	16.00
DN150 (6")	60	650	135	465	250	100	PN10	18.80
DN200 (8")	60	820	170	582	300	120	PN10	34.00
DN250 (10")	70	1020	202	682	300	120	PN10	56.00
DN300 (12")	70	1120	240	782	300	120	PN10	68.00

Item 1	Item 2	Item 3	Item 4
Body Material	Gate Material	Seat Material	Actuator Material
Cast iron : GG25 + Epoxy coating	Stainless steel : AISI 304	EPDM	Cast iron : GG25

Belven N.V.

Blokhuisstraat 24 | 2800 Mechelen | Belgium

Tel. 015 29 40 70 | Fax. 015 20 14 13 | info@belven.com | www.belven.com

We keep the right to change the mentioned dimensions, weights, values and materials at any time without prior or direct notice.