Technical Product Sheet

BV38-6666B-PN10

Wafer type swing check valve, mounting beween flanges PN10
Face to Face Standard: Factory standard

Item Number	Belven Ref.
382077B0250	BV38-6666B-PN10-DN250
382077B0300	BV38-6666B-PN10-DN300
382077B0350	BV38-6666B-PN10-DN350
382077B0400	BV38-6666B-PN10-DN400
382077B0450	BV38-6666B-PN10-DN450
382077B0500	BV38-6666B-PN10-DN500
382077B0600	BV38-6666B-PN10-DN600

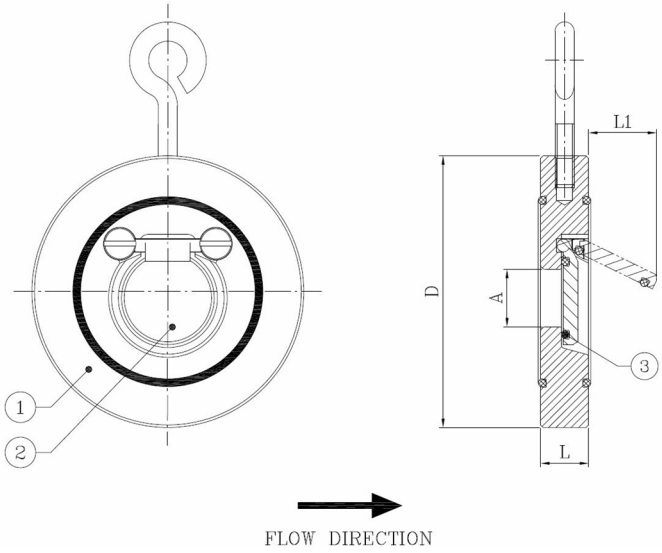

DN/Size	L	D	A	L1	Press.Cl.	Weight(kg)
DN250 (10")	26	330	192	190	PN10	12.60
DN300 (12")	32	380	227	220	PN10	20.50
DN350 (14")	38	440	266	250	PN10	33.50
DN400 (16")	44	491	310	290	PN10	52.00
DN450 (18")	52	541	350	340	PN10	71.00
DN500 (20")	58	596	400	390	PN10	94.00
DN600 (24")	62	698	486	470	PN10	128.00

Item 1	Item 2	Item 3
Body Material	Disc Material	Seat Material
Stainless steel : 1.4408 (CF8M)	Stainless steel : 1.4408/1.4581 (CF8M/AISI 316Nb)	NBR

Belven N.V.
Blokhuisstraat 24 | 2800 Mechelen | Belgium
Tel. 015 29 40 70 | Fax. 015 20 14 13 | info@belven.com | www.belven.com

We keep the right to change the mentioned dimensions, weights, values and materials at any time without prior or direct notice.