Technical Product Sheet

BV4-4766T-PN16-TR - Single Acting (AFC)

Ball valve, full bore, trunnion mounted, split body, flanged PN16, with spring return actuator AFC

Face to Face Standard: EN 558-1 series 27

The actuator is selected for 25°C water with a pressure drop of 16 bar with 6 bar supply air pressure and minimum 1 cycle per week, at air pressure faillure the springs will put the valve in closed position

Item Number	Belven Ref.
043D07SA1250TR	BV4-4766T-PN16-DN250 - SR330
043D07SA1300TR	BV4-4766T-PN16-DN300 - SR330

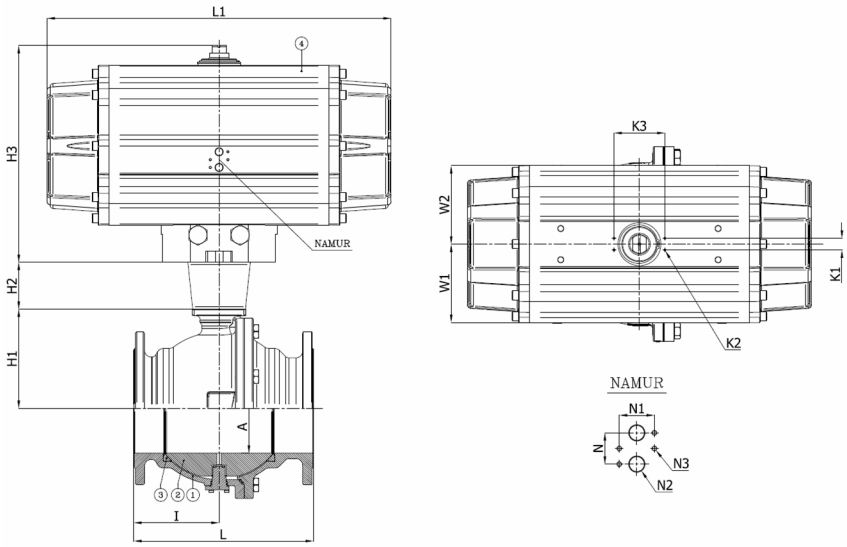

DN/Size	L	H1	H2	H3	I	L1	W1	W2	K3	K1	N	N1	N2	N3	Press.Cl.	Weight(kg)
DN250 (10")	450	272	120	555	225	881	201	201	130	30	40	45	1/2"	M6	PN16	397.00
DN300 (12")	500	303	120	555	250	881	201	201	130	30	40	45	1/2"	M6	PN16	443.00

Item 1	Item 2	Item 3	Item 4
Body Material	Ball Material	Seat Material	Actuator Material
Low-temperature steel : 1.1156 (LCB)	Stainless steel : A182-F304 / A351-CF8	PTFE	Extruded aluminium

Belven N.V.

Blokhuisstraat 24 | 2800 Mechelen | Belgium

Tel. 015 29 40 70 | Fax. 015 20 14 13 | info@belven.com | www.belven.com

We keep the right to change the mentioned dimensions, weights, values and materials at any time without prior or direct notice.